Save This Manual For Future Reference

SEARS

owner's manual

MODEL NOS.
113.177120
113.177440
113.177460
(6-Gallon)

Serial Number ________
Model and serial numbers may be found on the back of the motor cover. You should record both model and serial numbers in a safe place for future use.

FOR YOUR SAFETY:

READ ALL INSTRUCTIONS CAREFULLY

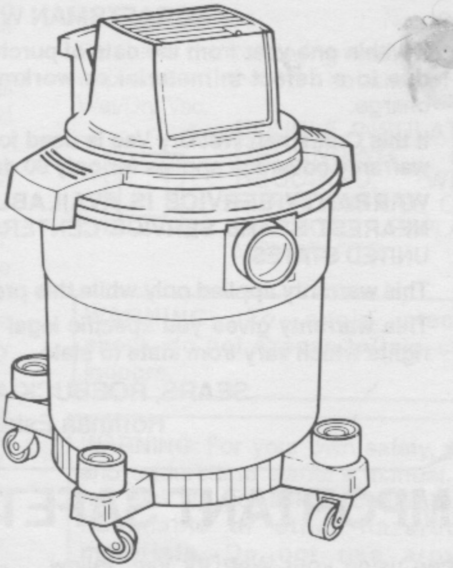

Caster feet with storage - not on all models

SEARS/CRAFTSMAN

6 GALLON WET/DRY VAC

- assembly
- operating
- repair parts

Sold by SEARS, ROEBUCK AND CO., Chicago IL 60684 U.S.A.

Part No. SP5465

Printed in U.S.A.

FULL ONE YEAR WARRANTY ON CRAFTSMAN WET/DRY VACS

If within one year from the date of purchase, this Craftsman Wet/Dry Vac fails due to a defect in material or workmanship, Sears will repair it, free of charge.

If this Craftsman Wet/Dry Vac is used for commercial or rental purposes, this warranty coverage applies for only 90 days from date of purchase.

WARRANTY SERVICE IS AVAILABLE BY SIMPLY CONTACTING THE NEAREST SEARS SERVICE CENTER/DEPARTMENT THROUGHOUT THE UNITED STATES.

This warranty applied only while this product is used in the United States.

This warranty gives you specific legal rights, and you may also have other rights which vary from state to state.

SEARS, ROEBUCK AND CO., D817 WA, Hoffman Estates, IL 60195

IMPORTANT SAFETY INSTRUCTIONS

When using your Wet/Dry Vac, follow basic safety precautions including the following.

WARNING – To reduce the risk of fire, electric shock, or injury:

Read and understand this owner's manual and all labels on the Wet/Dry Vac before operating. Use only as described in this manual. To avoid personal injury or damage to Wet/Dry Vac, use only Sears Craftsman recommended accessories.

Sparks inside the motor can ignite flammable vapors or dust. To avoid fire or explosion:

- Do not vacuum, or use this Wet/Dry Vac near, flammable or combustible liquids, gases, or explosive dusts like gasoline or other fuels, lighter fluid, cleaners, oil-based paints, natural gas, hydrogen, coal dust, magnesium dust, grain dust, or gun powder.
- Do not use Wet/Dry Vac as a sprayer for any flammable or combustible liquid.

Do not vacuum anything that is burning or smoking, such as cigarettes, matches, or hot ashes.

To avoid health hazards from vapors or dusts, do not vacuum toxic materials.

Do not use or store near hazardous materials.

To avoid electric shock, do not expose to rain. Store indoors.

Do not allow to be used as a toy. Close attention is necessary when used by or near children.

Do not use this Wet/Dry Vac with a torn filter or without the filter installed except for vacuuming liquids as described in the operations section of this manual.

Do not leave Wet/Dry Vac when plugged in. Unplug from outlet when not in use and before servicing. Turn off Wet/Dry Vac before unplugging.

To avoid injury from accidental starting, unplug power cord before changing or cleaning filter.

Do not unplug by pulling on cord. To unplug, grasp the plug, not the cord.

Do not use with damaged cord, plug or other parts. If your Wet/Dry Vac is not working as it should, has missing parts, has been dropped, damaged, left outdoors, or dropped into water, return it to a Sears Service Center.

Do not pull or carry by cord, use cord as handle, close a door on cord, or pull cord around sharp edges or corners. Do not run Wet/Dry Vac over cord. Keep cord away from heated surfaces.

Do not handle plug or the Wet/Dry Vac with wet hands.

Do not put any object into ventilation openings. Do not vacuum with any ventilation openings blocked; keep free of dust, lint, hair or anything that may reduce air flow.

Keep hair, loose clothing, fingers, and all parts of body away from openings and moving parts.

To avoid falls, use extra care when cleaning on stairs.

This Wet/Dry Vac is double-insulated, eliminating the need for a separate grounding system. Use only identical replacement parts. Read the instructions for Servicing Double-Insulated Wet/Dry Vacs before servicing.

Extension cords in poor condition or that are too small can pose fire and shock hazards. When using an extension cord, be sure it is in good condition. Using any extension cord will cause some loss of power. To keep the loss to a minimum, use the table below to choose the minimum wire size extension cord.

Extension Cord Length	Wire Size
• 0-50 feet	No. 14
• 50-100 feet	No. 12

Observe the following warnings that appear on the motor housing of your Wet/Dry Vac.

DOUBLE INSULATED. GROUNDING NOT REQUIRED. WHEN SERVICING USE ONLY IDENTICAL REPLACEMENT PARTS.

WARNING: To avoid electric shock–do not expose to rain–store indoors.

WARNING: For your own safety, read and understand owner's manual. Do not pick up hot ashes, coals, toxic, flammable or other hazardous materials. Do not use around explosive liquids or vapors.

SAVE THESE INSTRUCTIONS

The operation of any utility vac can result in foreign objects being blown into the eyes, which can result in severe eye damage. Always wear safety goggles complying with ANSI Z87.1 (shown on package) before commencing operation. Safety Goggles are available at Sears retail or catalog stores.

To avoid hearing damage, wear ear protectors when using the vac for extended hours or when , using it in a noisy area.

Introduction

This Wet/Dry Vac is intended for household use.

IMPORTANT NOTE
Please Read Carefully

Static Shocks Are Common–In dry areas or when the relative humidity of the air is low. To reduce the frequency of static shocks in your home the best remedy is to add moisture to the air with a console humidifier.

Owner's Manual Contents

Item **Page**

Warranty Information.............................2
Safety Instructions.................................3
Introduction..3
Unpacking and Checking
Carton Contents................................4
Assembly..4
Operation..6
Maintenance..8
Repair Parts 10

Unpacking and Checking Carton Contents

Remove entire contents of carton. Check each item against the Carton Contents List. Notify your Sears Store immediately if any parts are damaged or missing.

Carton Contents List

Key	Description	Qty.
A	Vac Assembly	1
B	Hose Assembly	1
C	Utility Nozzle	1
*D	Caster Storage	4
E	Caster	4
F	Owners Manual	1
G	Filter Cage	1
H	Filter (Red Stripe)	1
I	Float	1
J	Filter Plate	1
K	Filter Nut	1

* Some models provided with caster foot storage

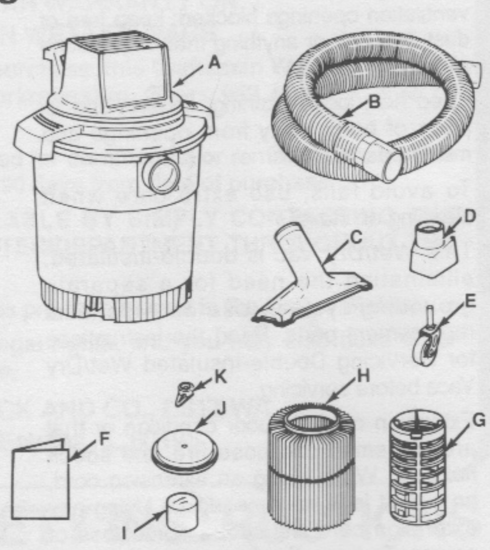

Float/Cage Assembly

WARNING: For your own safety, never connect plug to power source outlet until all assembly steps are complete and your have read and understood the safety and operation instructions. Do not operate vac with any parts damaged or missing.

1. Remove the top section of the vac from the drum and the drum itself out of the carton. Place the top section of vac upside down into the drum or place on a clean smooth surface.
2. Locate the float. Place the float over the opening in the center of the lid with the words "This Side Towards Lid" laying face down over the hole.

WARNING: To avoid personal injury or damage to vac be sure to keep hands, fingers, or any other foreign objects out of the center opening when assembling the float.

3. Line up filter cage tabs to the slots in the center ring of the lid assembly.
4. Push on the filter cage until the tabs snap into the slots for a secure fit.

NOTE: If the filter cage needs to be removed, because the float is placed in the wrong way, use a slotted screwdriver and press the blade against one of the filter cage tabs. Push in on the tab and lift the filter cage up. Tilt the filter cage slightly away from the open slot to release the other two tabs. Pull the filter cage away from the lid. To replace, follow float/cage assembly instructions.

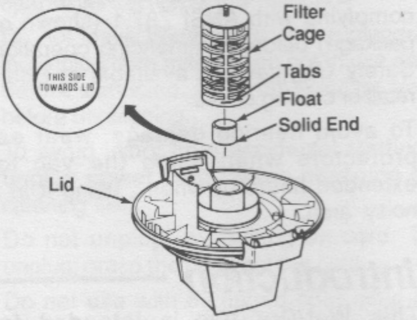

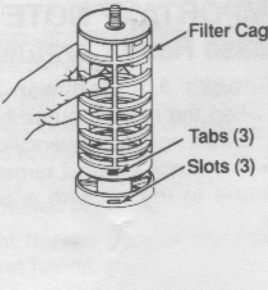

Filter Assembly

1. Carefully put the filter onto the filter cage by sliding it over the center ring covering the 3 slots until it rests on the lid.
2. Place the hole of the filter plate over threaded screw of the filter cage.
3. Gently push on the filter plate in order for the rubber ring of the filter to seat inside the circular channel of the filter.
4. Place filter nut onto threaded screw and tighten it down. Finger tighten only.

NOTE: Lever of filter nut should be away from plate as shown.

> **CAUTION: Do not overtighten as this will deform or crack the filter plate or filter cage.**

NOTE: Your filter has a red stripe that matches an in-store displayer. When you visit your local Sears store, just remember the color of your stripe for the correct size filter.

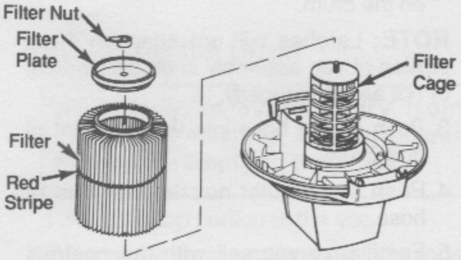

Caster/Caster Foot Assembly

1. Turn the dust drum upside down on the floor.
2. Insert the caster feet into the bottom of drum, as shown (4 places).
3. Push on the caster foot until the foot is flush with bottom of the dust drum.
4. Insert the caster stem into the socket of the caster foot, as shown (4 places).
5. Push on the caster until the ball on the caster stem is inserted all the way into the socket. You will be able to hear the ball snap into the socket and the caster will swivel easily when positioning is correct.
6. Turn the drum upright.

NOTE: If your casters are noisy, you may put a drop of oil on the roller shaft to make them quieter.

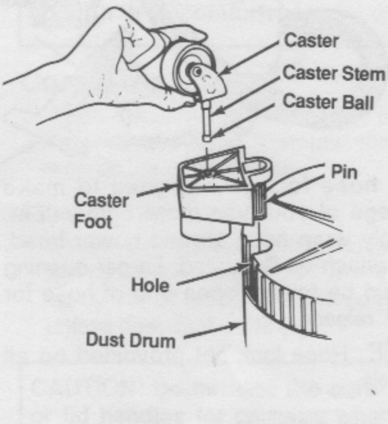

To Store Your Accessories

1. Slide extension handles and accessories over rings on caster feet storage. The 1-1/4" accessories fit over the inner ring, and the 2-1/2" accessories fit over the outer ring.
2. To remove handles and accessories, lightly rotate and pull upward.

NOTE: Not provided on all models.

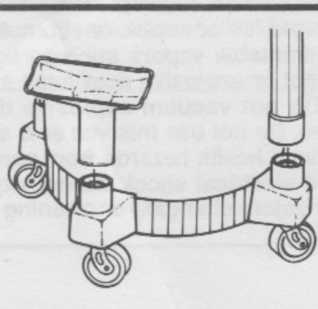

Vac Assembly

1. Line up deflector on top portion of vac with the vacuum inlet of the drum.
2. Position the handles with flexible latches over the locking tabs on the drum. Press down on the handles until the flexible latches snap over the tabs on the drum.

NOTE: Latches will not snap on if top portion of vac assembly is on backwards, or not aligned properly.

3. Push end of hose into vacuum inlet of dust drum.
4. Push rectangular nozzle onto end of hose.
5. Familiarize yourself with the controls and features of your vac.

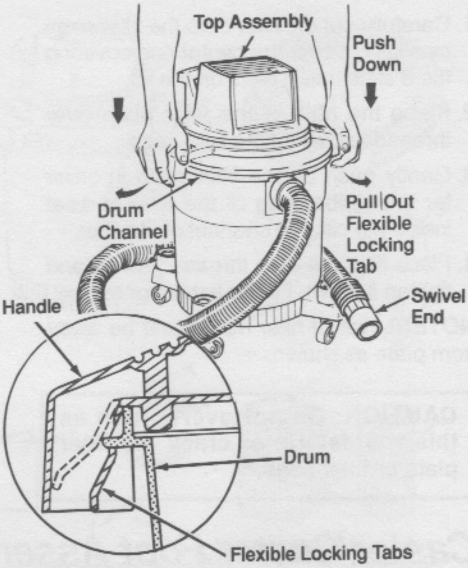

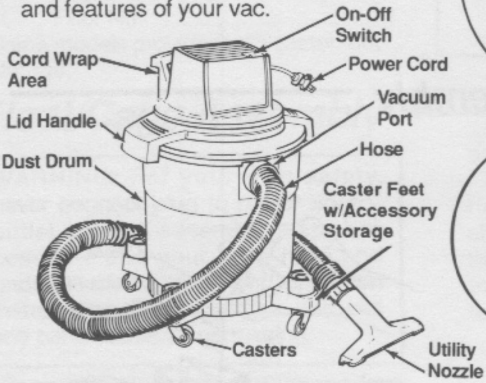

The hose lock is designed to make storage of your vac more convenient. Simply wrap hose around power head, and attach as illustrated. Larger opening should be toward open end of hose for easy release.

NOTE: Hose lock not provoided on all models

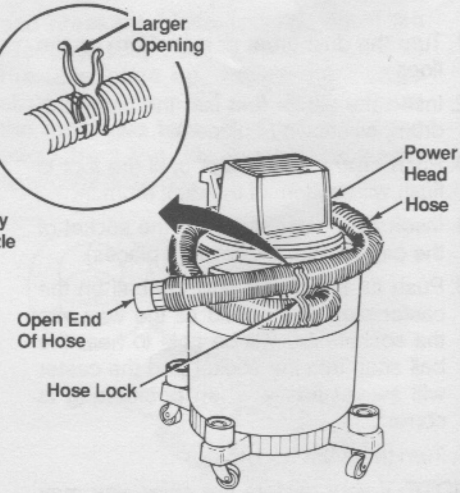

Operation

WARNING

To avoid fire or explosion, do not operate this vac in areas with flammable gases or flammable vapors such as lighter fluid, cleaners, oil-base paints, gasoline, alcohol or explosive dust such as coal, magnesium, grain or gun powder in the air. Do not vacuum explosive dust, flammable or combustible liquids or hot ashes. Do not use this vac as a sprayer for any flammable or combustible liquid. To avoid health hazards from vapors or dusts, do not vacuum toxic materials. To avoid electrical shock do not expose to rain. Store vac indoors. Unplug power cord before changing or cleaning filter or emptying the dust drum.

Vacuuming Dry Materials

1. The filter must be in correct position at all times to avoid leaks and possible damage to vac.
2. When using your vac to pick up very fine dust, it will be necessary for you to empty the drum and clean the filter at more frequent intervals to maintain peak vac performance.

NOTE: A dry filter is necessary to pick up dry material. If you use your vac to pick up dust when the filter is wet, the filter will clog quickly and be very difficult to clean.

3. If your filter is wet but you need to use the vac to pick up dry material, you can quickly dry the filter by running the vac without hose attached for 10 minutes. The clean air rushing through the vac will dry the filter enough for dry pick up.

Emptying Dust Drum

1. To remove lid to empty contents of drum, simply pull flexible locking tabs on both sides of the drum to release from the lip of the drum. It may be easier to do by pressing down on the handles with the bottom part of the palm of your hand while pulling outward on the flexible locking tabs with your fingers.
2. While holding the tabs back, lift the top assembly up and away from the drum.
3. Lay top assembly upside down on a clean area while emptying drum or changing filter.

Vacuuming Liquids

1. When the liquid in the drum reaches a predetermined level, a float mechanism will rise automatically to cut off airflow. When this happens, turn off the vac, unplug the power cord, and empty the drum.
2. After using the vac to pick up liquids, the filter must be dried to avoid possible mildew and damage to the filter.
3. When picking up small amounts of liquid the filter may be left in place.
4. When picking up large amounts of liquid we recommend that the filter be removed. If the filter is not removed, it will become saturated and misting may appear in the exhaust.

CAUTION: To avoid damage to the vac do not run motor with float in raised position.

NOTE: You will know that the float has risen because vac airflow ceases and the motor noise will become higher in pitch–due to increase in the motor speed.

Emptying the Drum

WARNING: To avoid injury from accidental starting, unplug power cord before emptying the drum.

1. Remove top portion of the vac.
2. Dump the drum contents into the proper waste disposal container. Dump drum contents opposite the vacuum inlet to avoid spillage.

WARNING: To avoid back injury or falls, do not lift a vac heavy with liquid or debris. Scoop enough contents out to make the vac light enough to lift comfortably.

Cord Wrap

1. When vacuuming is complete, unplug the cord and wrap it around the cord wrap on the motor cover.

Moving the Vac

1. Should it become necessary to pick the vac up to move it, DO NOT pick the vac up by the lid handles or the cord wrap unless dust drum is empty.

CAUTION: Do not use the cord wrap or lid handles for carrying when vac contains debris or liquid because the weight may cause a separation of lid and drum, which could cause part breakage or spillage. Instead, roll the vac on it's casters or pick it up by the drum lip.

Filter Maintenance

WARNING: To avoid injury from accidental starting, unplug power cord before changing or cleaning filter.

NOTE: This filter is made of high quality paper designed to stop very small particles of dust. The filter can be used for wet or dry pick up. Handle the filter carefully when removing to clean or installing it. Creases in the filter pleats may occur from installation but creases will not affect the performance of the filter.

Removal

To remove the filter for cleaning or replacement:

1. Remove filter nut from the screw on the filter cage, remove filter plate and lift off filter.

CAUTION: To avoid damage to the blower wheel and motor, always reinstall the filter before using the vac for dry material pick-up.

Installation

(See page 5 "Filter Assembly")

WARNING: Do not remove the filter cage. It is there to help prevent your fingers from getting into the blower wheel.

Dry Filter

1. Some removal of dry debris can be accomplished without removing the filter from the vac by slapping your hand on top of the lid while the vac is off.
2. After filter removal from vac, remove the dry debris by gently tapping the filter against the inside wall of your dust drum and the debris will loosen and fall.

NOTE: For best results of cleaning due to accumulated dust, clean the filter in an open area. Cleaning SHOULD be done outdoors and not in the living quarters.

3. For thorough cleaning of dry filter with fine dust (no debris) you may run water through it as described under "Wet Filter".

Wet Filter

After filter is removed, a wet filter should be cleaned by running water through it from a hose or spigot. Take care that water pressure from the hose is not strong enough to damage filter.

IMPORTANT: You can quickly dry the filter by running the vac without the hose assembly attached for approximately 10 minutes with filter in place to speed up drying. Check the filter for tears or small holes. Even a small hole can cause a lot of dust to come out of your vac. Do not use a filter with holes or tears in it. Replace it immediately.

Wet/Dry Vac Maintenance

Cleaning Lid Assembly

To keep your Wet/Dry Vac looking its best, clean the outside with a cloth dampened with warm water and mild soap.

IMPORTANT: To assure product SAFETY and RELIABILITY, repairs and adjustment should by performed by Sears Service Centers, always using Sears replacement parts.

Cleaning Drum

1. Dump debris out.
2. For sanitary reasons, never leave wet debris in vac drum after use.
3. The drum can be thoroughly washed by scrubbing when filled with warm soapy water.

Accessories

Additional Wet/Dry Vac Accessories may be purchased at your local Sears retail store or any Sears catalog.

Notes

Repair Parts

FOR 6-GALLON WET/DRY VAC

Always order by Part Number – Not by Key Number

113.177120, 113.177440 & 113.177460

WARNING

SERVICING OF DOUBLE-INSULATED WET/DRY VAC

In a double-insulated Wet/Dry Vac, two systems of insulation are provided instead of grounding. No grounding means is provided on a double-insulated appliance, nor should a means for grounding be added. Servicing a double-insulated Wet/Dry Vac requires extreme care and knowledge of the system, and should be done only by qualified service personnel. Replacement parts for a double-insulated Wet/Dry Vac must be identical to the parts they replace. Your double-insulated Wet/Dry Vac is marked with the words "DOUBLE INSULATED" and the symbol ▣ (square within a square) may also be marked on the appliances.

Key No	Part Number	Description
1	9-17816	† Filter (Red Stripe)
2	73317	Filter Plate
3	73316	Filter Nut
4	73347	Dust Drum
5	73164	Caster Foot
5	9-16931	Caster Foot w/Storage
6	73102	Caster
7	9-17866	† Hose Assembly
8	73362	Filter Cage
9	73349	Float
10	STD611007	* Screw - Pan Hd. Type AB, No. 10 x 3/4"
11	STD611010	* Screw - Pan Hd. Type AB, No. 10 x 1"
12	820156	Lid
13	73352	Nut, Flange
14	15534-1	Washer
15	818413-5	Blower Wheel
16	818961	Spacer
17	819049	Motor Assembly (Includes Key Nos. 13, 14, 15 & 16)
18	820391	Collector
19	73180	Switch
20	819056	Motor Cover
21	9-16922	† Rectangular Nozzle
–	SP5465	Owner's Manual (Not Illustrated)

†Stock Item - May Be Secured Through The Hardware Department Of Most Sears Retail Stores Or Catalog Order Houses.

*Standard Hardware Item - May Be Purchased Locally.

Repair Parts

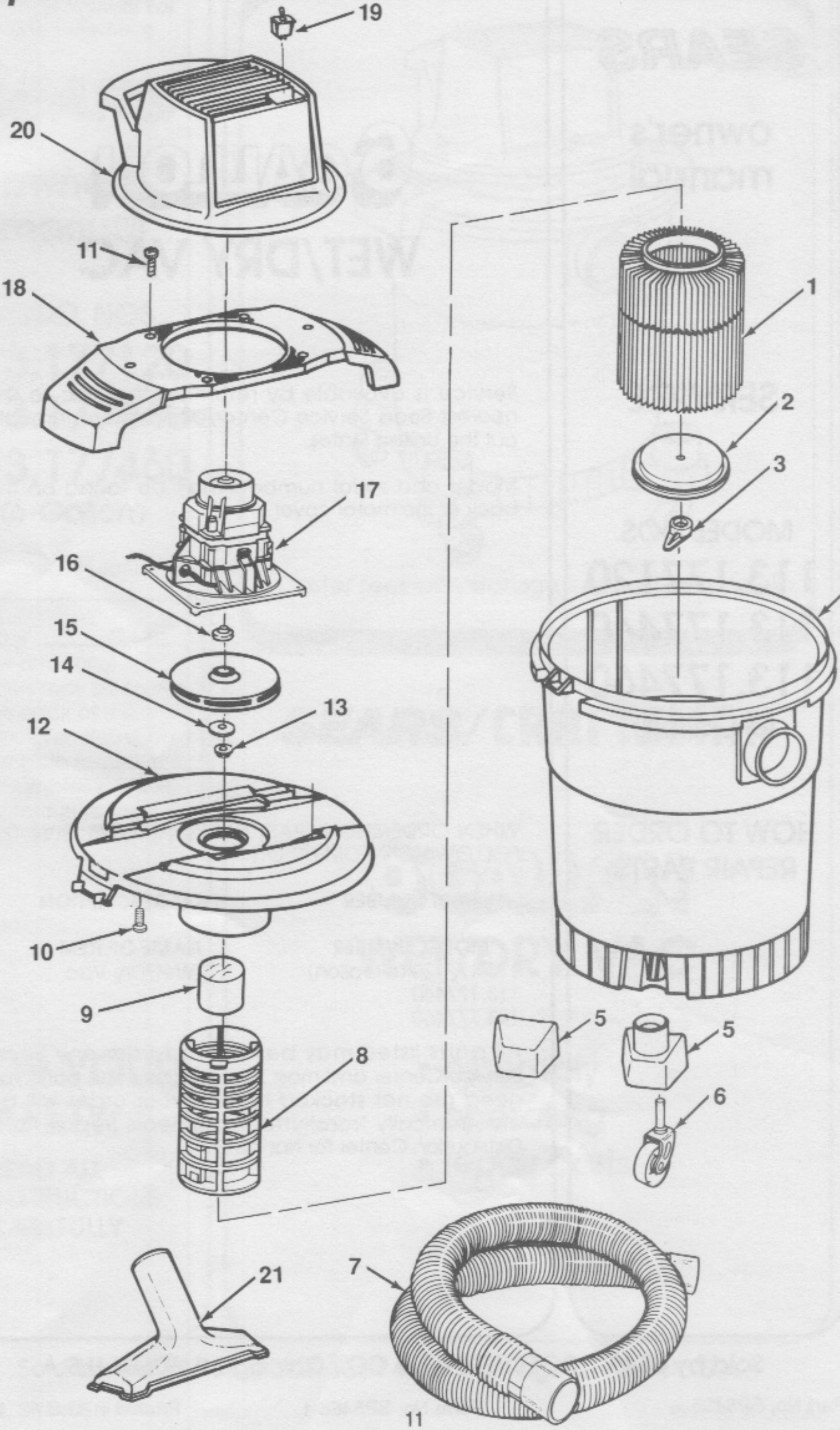

SEARS

owner's manual

6 GALLON WET/DRY VAC

SERVICE

Service is available by returning this Vac to the nearest Sears Service Center/Department throughout the United States.

Model and serial numbers may be found on the back of the motor cover.

MODEL NOS.

113.177120

113.177440

113.177460

(6-Gallon)

HOW TO ORDER REPAIR PARTS

WHEN ORDERING REPAIR PARTS, ALWAYS GIVE THE FOLLOWING INFORMATION:

PART NUMBER	PART DESCRIPTION
MODEL NUMBER	**NAME OF ITEM**
113.177120 (6-Gallon)	Wet/Dry Vac
113.177440	
113.177460	

All parts listed may be ordered from any Sears Service Center and most Sears stores. If the parts you need are not stocked locally, your order will be electronically transmitted to a Sears Repair Parts Distribution Center for handling.

Sold by SEARS, ROEBUCK AND CO., Chicago IL 60684 U.S.A.

Part No. SP5465 Form No. SP5465-1 Printed in U.S.A. 10/92